~220...240V 50...60Hz Class I IP54

VOSS Art.780,783,784,785 G12, HIT-CE, 70W

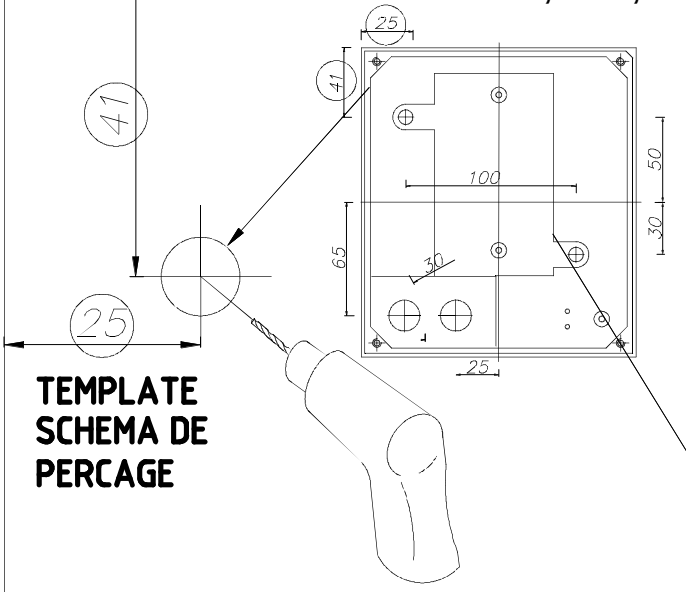

TEMPLATE
SCHEMA DE PERCAGE

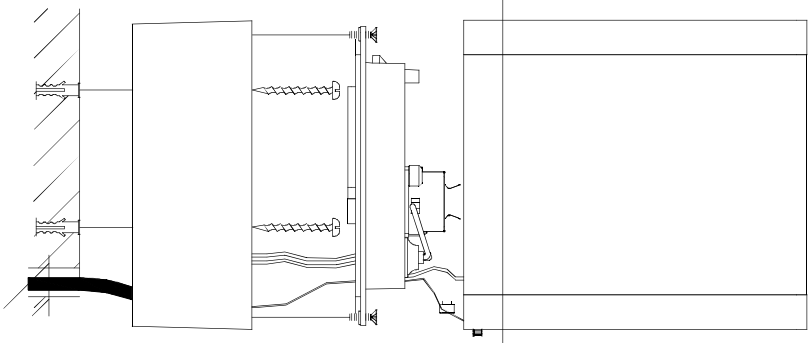

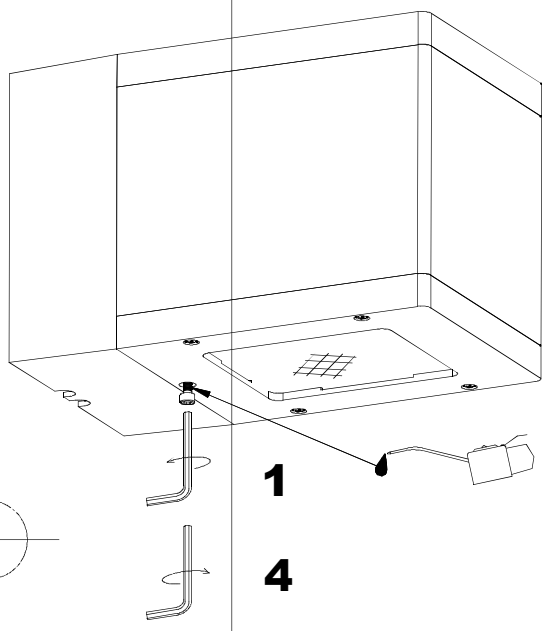

1

4

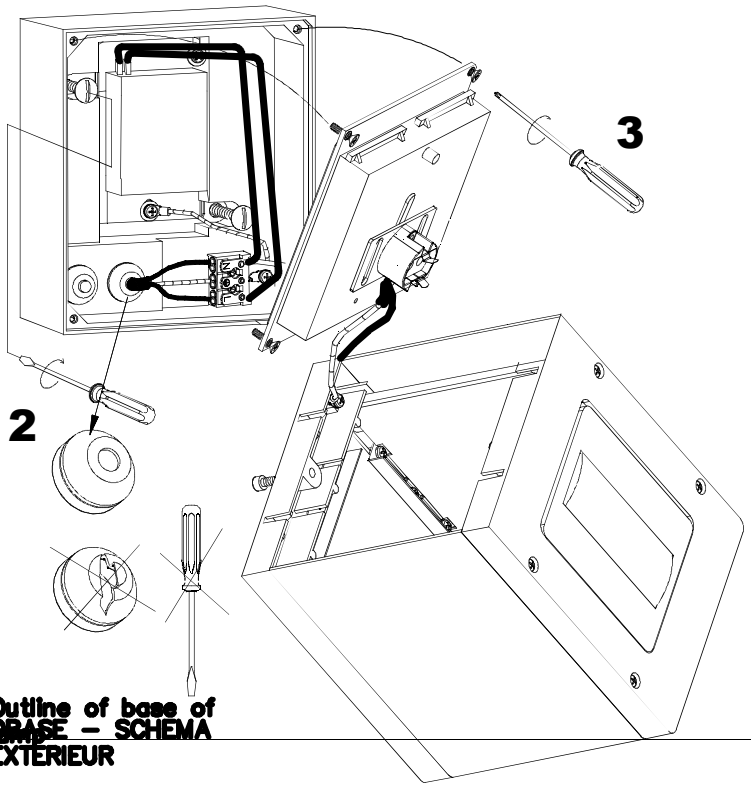

3

2

SCHEMA DE PERCAGE

Outline of base of lamp – SCHEMA EXTERIEUR

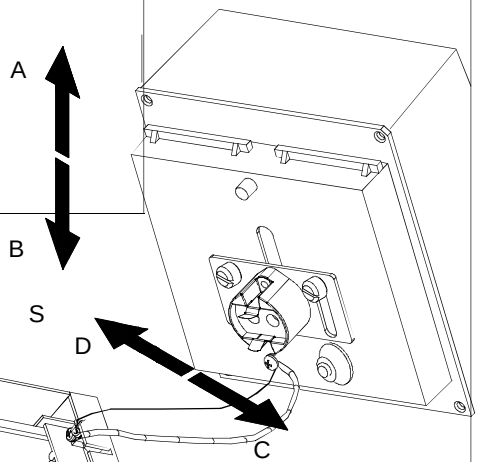

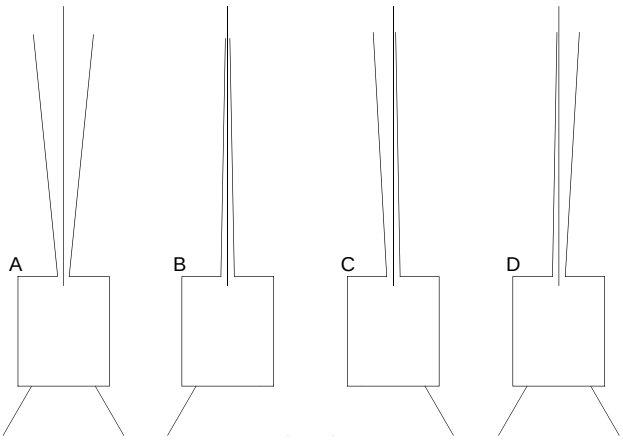

Adjust the light beam by means "S" and by moving the lampholder support bracket until the reguired position is found.
FAIRE GLISSER LA LAMPE POUR MODIF DES FAISCEAU (VIS "S")

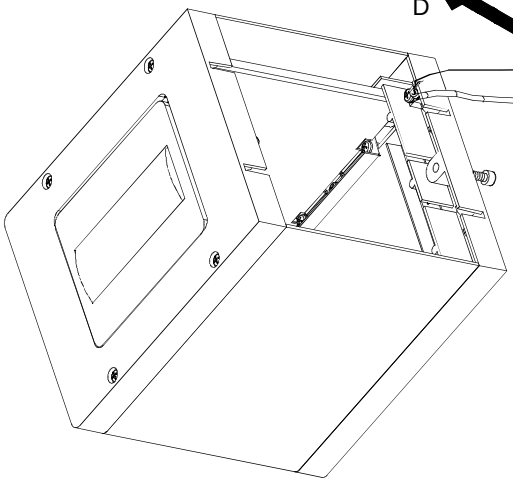

≤1,5□ x=10mm
1,5÷2,5□ x=12mm

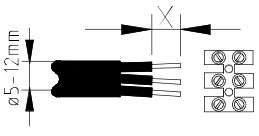

3x max.2,5□

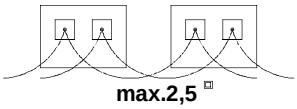

NORLYS

INSTR. N°780,783,784,785 IV/2014